REMOVAL

1. **PRECAUTION**
   HINT:
   (See page RS-1)
2. **SEPARATE BATTERY NEGATIVE TERMINAL**
3. **REMOVE INSTRUMENT CLUSTER FINISH PANEL SUB-ASSEMBLY CENTER**
   HINT:
   (See page IP-5)
4. **REMOVE INSTRUMENT CLUSTER FINISH PANEL ASSEMBLY CTR**
   HINT:
   (See page IP-5)
5. **REMOVE INSTRUMENT PANEL BOX**
   HINT:
   (See page IP-5)
6. **REMOVE INSTRUMENT PANEL FINISH PANEL LOWER CENTER**
   HINT:
   (See page IP-5)
7. **REMOVE AIRBAG SENSOR ASSEMBLY CENTER**
   HINT:
   (See page RS-314)
8. **SEPARATE OXYGEN SENSOR CONNECTOR**
   (a) Remove the foot rest.
   (b) Pull up the floor carpet.
   (c) Disconnect the oxygen sensor connector.
9. **REMOVE FLOOR PANEL BRACE FRONT**
   (a) Remove the 2 nuts and floor panel brace.
10. **REMOVE EXHAUST PIPE ASSEMBLY FRONT**
    HINT:
    (See page EX-2)
11. **REMOVE FRONT FLOOR HEAT INSULATOR NO.1**
    (a) Remove the 3 nuts and heat insulator.
12. **REMOVE AIR CLEANER ASSEMBLY WITH HOSE**
13. **REMOVE TRANSMISSION CONTROL CABLE ASSEMBLY**
    (a) Remove the nut and disconnect control cable from control shaft lever.

cardiagn.com

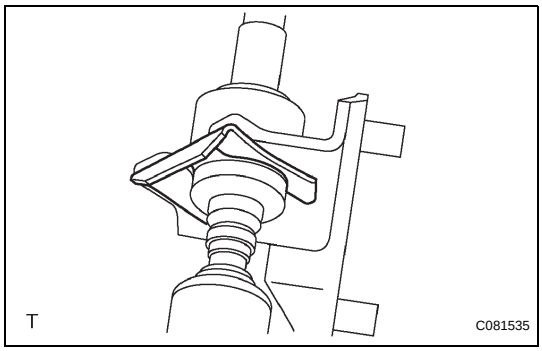

(b) Remove the clip and disconnect the control cable from the bracket.

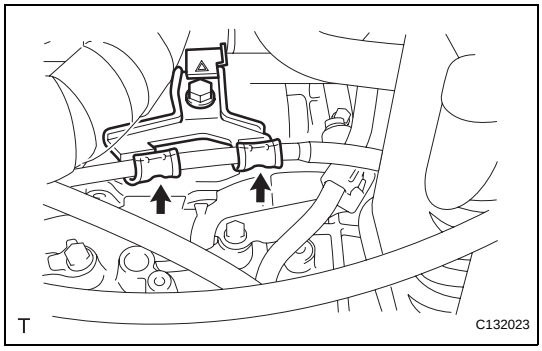

(c) Disconnect the control cable from control cable support.

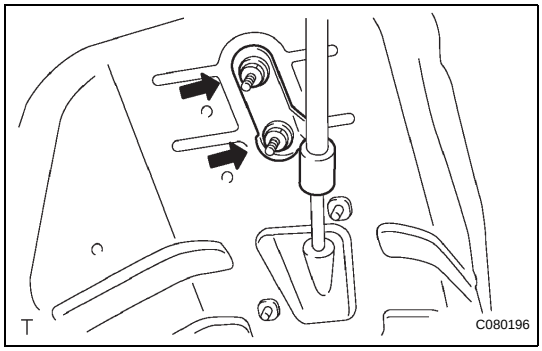

(d) Remove the 2 nuts and separate the control cable from the body.

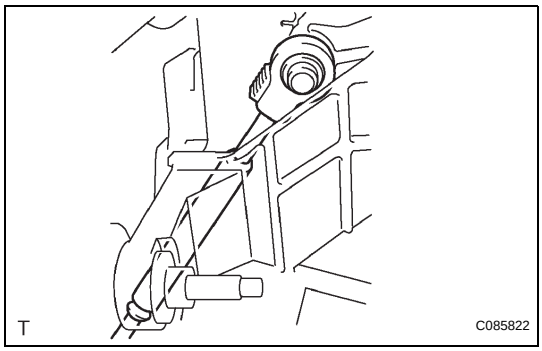

(e) Remove the cable end from the floor shift assembly.

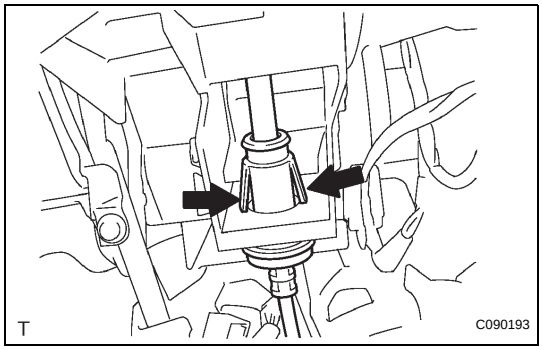

(f) Using a screwdriver, disconnect the control cable from the shift lever plate.
HINT:
Tape up the screwdriver tip before use.

AX

cardiagn.com

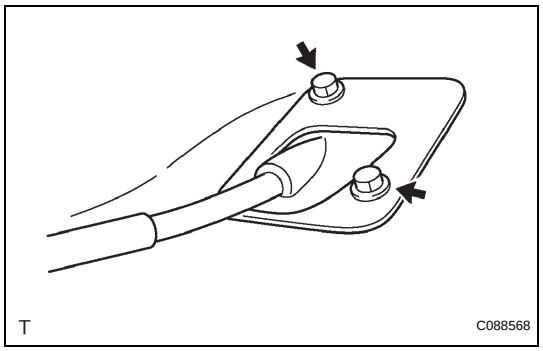

(g) Remove the 2 bolts.
(h) Pull out the control cable assembly from the body.
(i) Remove the retainer from the shift cable.

cardiagn.com